NMRV/NRV

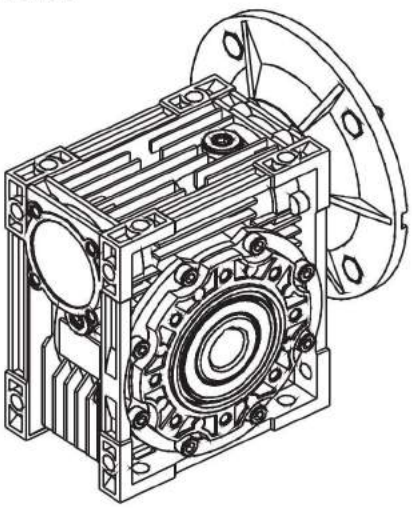

NMRV

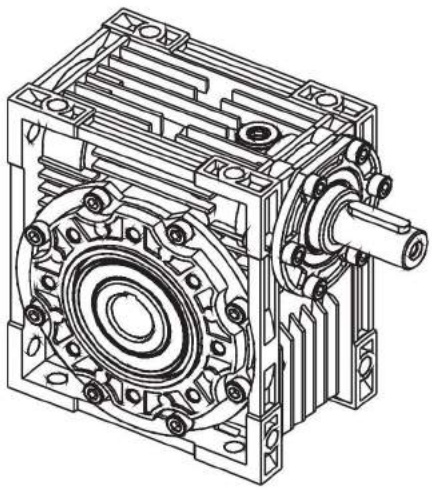

NRV

NMRV Model & marker

NMRV-063-30-VS-F1(FA)-AS-80B5-0.75kW-B3	
NMRV	Worm geared motor
NRV	Worm reduction unit
063	Center dictance
30	Reduction ratio
VS	Double input shaft
AS	Single output shaft
PAM	Fitted for motor coupling
0.75kW	Electric motor power
F1(FA)	Output flange
AB	Double output shaft
80B5	Motor mounting facility
B3	Mounting position

Predisposition

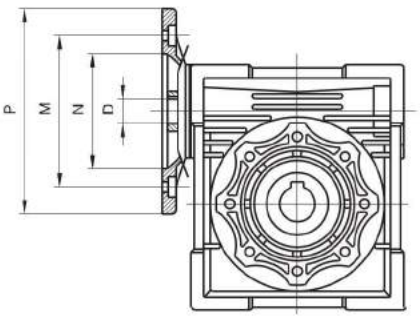

NMRV	PAM / IEC	N	M	P	D											
					5	7.5	10	15	20	25	30	40	50	60	80	100
025	56B14	50	65	80	9	9	9	9	9	–	9	9	9	9	–	–
030	63B5	95	115	140	11	11	11	11	11	11	11	11	11	–	–	–
	63B14	60	75	90												
	56B5	80	100	120	9	9	9	9	9	9	9	9	9	9	9	–
	56B14	50	65	80												
040	71B5	110	130	160	14	14	14	14	14	14	14	14	–	–	–	–
	71B14	70	85	105												
	63B5	95	115	140	11	11	11	11	11	11	11	11	11	11	11	11
	63B14	60	75	90												
	56B5	80	100	120	–	–	–	–	–	–	–	–	9	9	9	9
050	80B5	130	165	200	19	19	19	19	19	19	19	–	–	–	–	–
	80B14	80	100	120												
	71B5	110	130	160	14	14	14	14	14	14	14	14	14	14	14	–
	71B14	70	85	105												
	63B5	95	115	140	–	–	–	–	–	–	–	11	11	11	11	11
063	90B5	130	165	200	24	24	24	24	24	24	24	–	–	–	–	–
	90B14	95	115	140												
	80B5	130	165	200	19	19	19	19	19	19	19	19	19	19	–	–
	80B14	80	100	120												
	71B5	110	130	160	–	–	–	–	–	–	–	14	14	14	14	14
	71B14	70	85	105												
075	100/112B5	180	215	250	28	28	28	–	–	–	–	–	–	–	–	–
	100/112B14	110	130	160												
	90B5	130	165	200	24	24	24	24	24	24	24	24	–	–	–	–
	90B14	95	115	140												
	80B5	130	165	200	–	–	–	–	19	19	19	19	19	19	19	19
	80B14	80	100	120												
	71B5	110	130	160	–	–	–	–	–	–	–	–	14	14	14	14
090	100/112B5	180	215	250	28	28	28	28	28	28	28	–	–	–	–	–
	100/112B14	110	130	160												
	90B5	130	165	200	24	24	24	24	24	24	24	24	24	24	–	–
	90B14	95	115	140												
	80B5	130	165	200	–	–	–	–	–	–	–	19	19	19	19	19
	80B14	80	100	120												
110	132B5	230	265	300	–	38	38	38	38	–	–	–	–	–	–	–
	100/112B5	180	215	250	–	28	28	28	28	28	28	28	28	28	–	–
	90B5	130	165	200	–	–	–	–	–	24	24	24	24	24	24	24
	80B5	130	165	200	–	–	–	–	–	–	–	–	–	–	19	19
130	132B5	230	265	300	–	38	38	38	38	38	38	38	–	–	–	–
	100/112B5	180	215	250	–	–	–	–	–	28	28	28	28	28	28	28
	90B5	130	165	200	–	–	–	–	–	–	–	–	–	–	24	24

Mounting Positions

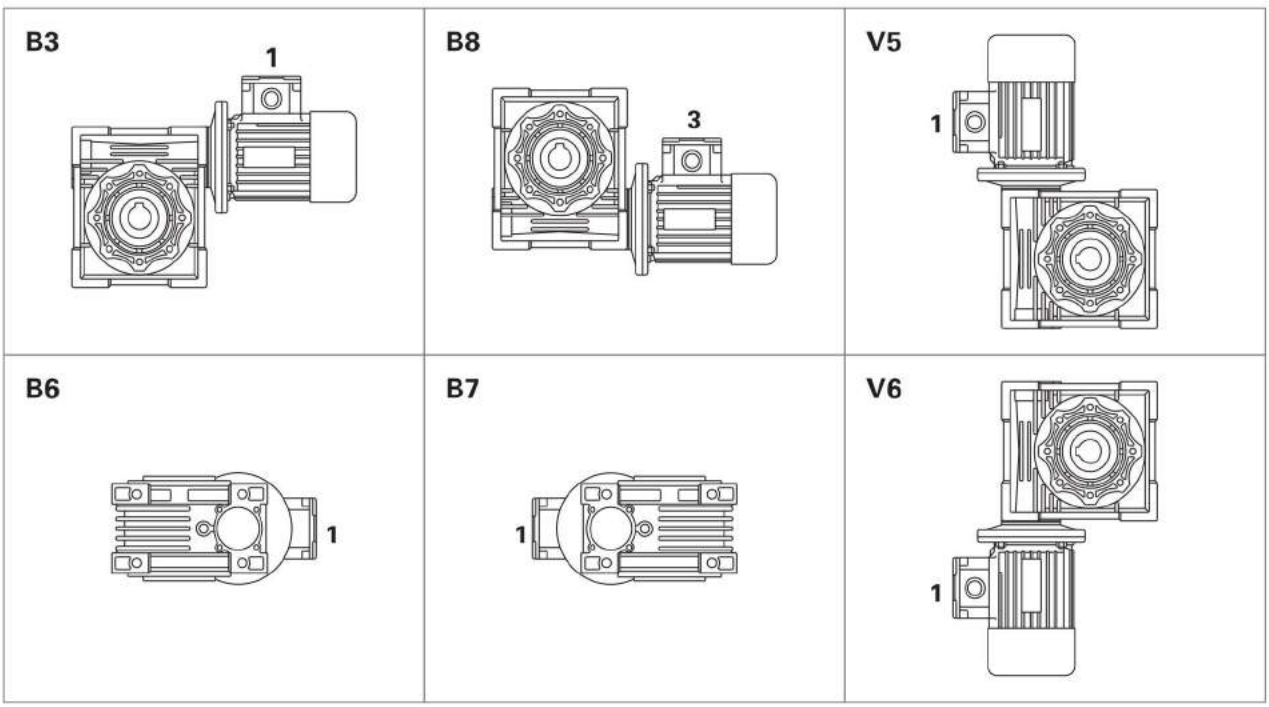

Flange F–FL

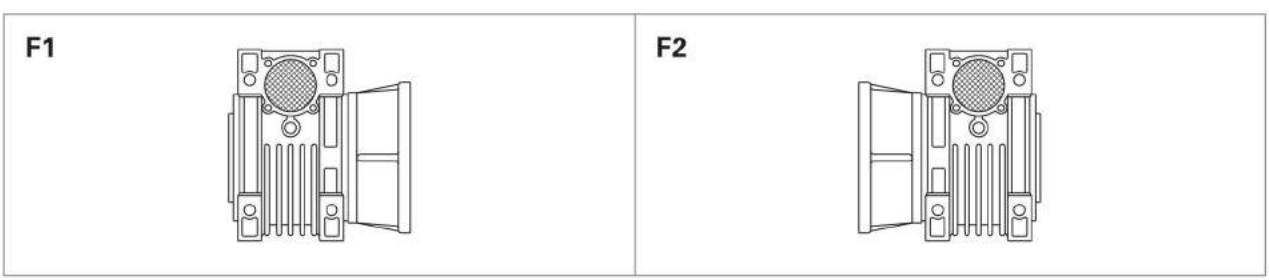

Position of terminal box

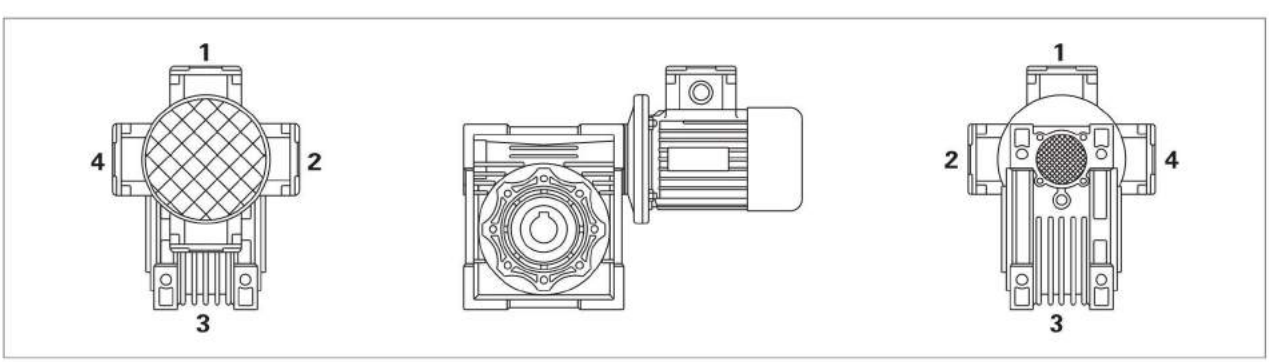

Position of output shaft

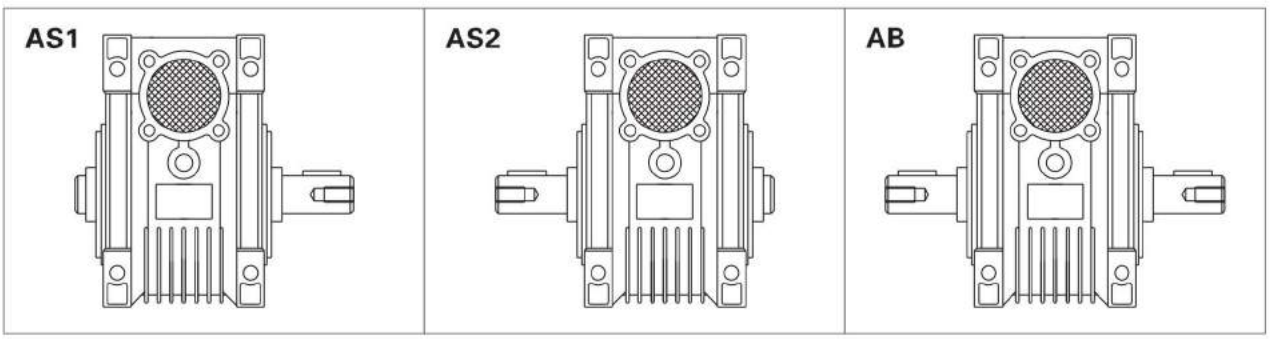

Double extension worm shaft

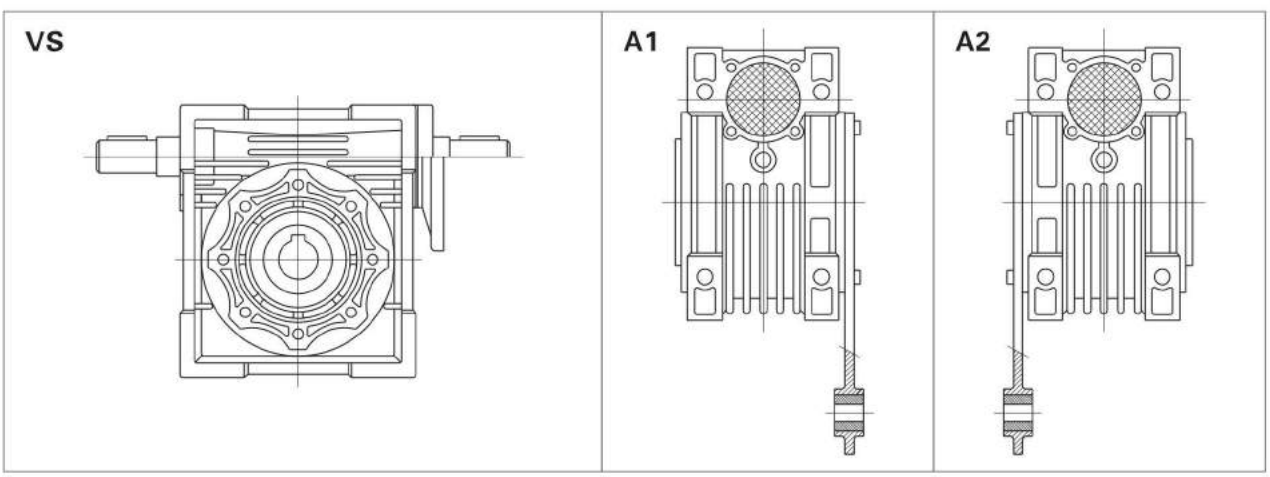

Choice of lubeicant

Q.ty of oil in litres									
NMRV	025	030	040	050	063	075	090	110	130
B3	0.02	0.04	0.08	0.15	0.3	0.55	1	3	4.5
B8								2.2	3.3
B6–B7								2.5	3.5
V5								3	4.5

		Synthetic	Mineral
ISO	VG32	VG320	VG320
Used in interior		WA460	
Used in foreign Countries	IP	TELIUM VSF	MELLANA OIL 220
	SHELL	TIVELA OIL SC320	OMALA OIL 220
	AGIP	BLASIA S320	BLASIA 220
	MOBIL	GLYGOYLE 30	MOBILGEAR 220
	CASTROL	ALPHASYN PG 320	ALPHA MAX 220

Parameter & symbol contrast table

P = Power (Kw)
M = Torque (Nm)
n = Speed (rpm)
i = Ratio
F = Load (N)
m = Weight (kg)

η = Efficiency
γ = Helix angle
f.s. = Service factor
1 = Input shaft
2 = Output shaft
r = Radial

a = Axial
s = Statical
d = Dynamic

Applied mid-way along the input shaft

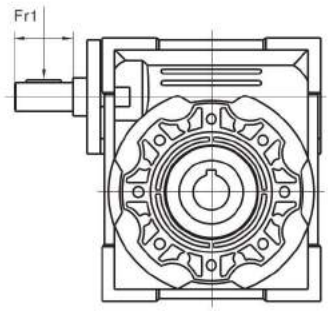

(N)

n1	NRV030	NRV040	NRV050	NRV063	NRV075	NRV090	NRV110	NRV130
1400	150	250	350	500	700	900	1200	1500
900	175	290	400	580	810	1040	1390	1740
500	210	350	490	700	980	1270	1700	2100

Applied mid-way along the output shaft

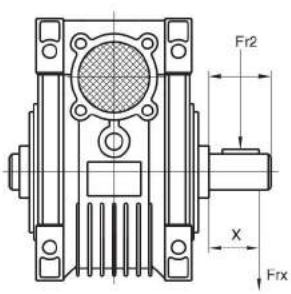

$$Frx = Fr \frac{a}{b+x}$$

(N)

n2	NRV025	NRV030	NRV040	NRV050	NRV063	NRV075	NRV090	NRV110	NRV130
400	390	530	1020	1400	1830	2160	2390	3020	3950
250	460	620	1200	1650	2150	2520	2800	3530	4610
150	550	740	1420	1960	2540	2990	3310	4180	5470
100	630	850	1620	2250	2910	3430	3800	4790	6260
60	740	1000	1920	2660	3450	4060	4500	5680	7420
40	850	1150	2200	3050	3950	4650	5150	6500	8500
25	990	1350	2570	3570	4620	5440	6020	7600	9940
10	1350	1830	3490	4840	6270	7380	8180	10320	13500
a	50	65	84	101	120	131	162	191	203
b	38	50	64	76	95	101	122	151	163

--Above table is the allowed loading force on the midpoint of output shaft.
--When the reducer is with double output shafts, the resul tant radial power at the edge of shaft should not exceed the values specified as in above table.
--The max allowed axial thrust is 1/5 of radial force while the radial force and axial force effected together.

Performance

P1(Kw)	n2(1/min)	M2(Nm)	F.S.	i	Type	Fr2(N)
0.06	280	1.8	6.2	5	NMRV025	439
	186.7	2.6	4.2	7.5		503
	140	3.4	3.5	10		553
	93.3	4.9	2.5	15		633
	70	6.1	2.0	20		697
	46.7	8.2	1.6	30		798
	35	10	1.3	40		878
	28	12	0.9	50		946
	23.3	14	0.7	60		1006
	280	1.8	10.1	5	NMRV030	597
	186.7	2.6	6.9	7.5		683
	140	3.4	5.4	10		752
	93.3	4.7	3.8	15		861
	70	6	3.0	20		948
	56	7	3.0	25		1021
	46.7	8	2.5	30		1085
	35	9.7	1.9	40		1194
	28	11	1.5	50		1286
	23.3	13	1.3	60		1367
	17.5	14	0.9	80		1504
0.09	280	2.7	4.1	5	NMRV025	439
	186.7	3.9	2.8	7.5		503
	140	5.1	2.4	10		533
	93.3	7.3	1.6	15		633
	70	9.2	1.3	20		697
	46.7	12	1.1	30		798
	35	15	0.9	40		878
	280	2.7	6.7	5	NMRV030	597
	186.7	3.9	4.6	7.5		683
	140	5	3.6	10		752
	93.3	7.1	2.5	15		861
	70	9	2.0	20		948
	56	10	2.0	25		1021
	46.7	12	1.7	30		1085
	35	14	1.2	40		1194
	28	17	1.0	50		1286
	23.3	19	0.9	60		1367
	28	19	2.0	50	NMRV040	2475
	23.3	21	1.7	60		2630
	17.5	26	1.3	80		2895
	14	29	1.0	100		3118
0.12	280	3.6	5.1	5	NMRV030	597
	186.7	5.2	3.4	7.5		683
	140	6.7	2.7	10		752
	93.3	9.5	1.9	15		861
	70	12	1.5	20		948
	56	14	1.5	25		1021
	46.7	16	1.3	30		1085
	35	19	0.9	40		1194
	28	23	0.8	50		1286
	46.7	17.2	2.6	30	NMRV040	2087
	35	21	1.9	40		2298
	28	25	1.5	50		2475

Performance

P1(Kw)	n2(1/min)	M2(Nm)	F.S.	i	Type	Fr2(N)
0.12	23	28	1.3	60	NMRV040	2630
	17.5	34	1.0	80		2895
	14	38	0.8	100		3118
	23.3	29	2.3	60	NMRV050	3610
	17.5	35	1.9	80		3973
	14	40	1.4	100		4280
0.18	280	5.3	3.4	5	NMRV030	597
	186.7	7.8	2.3	7.5		683
	140	10	1.8	10		752
	93.3	14	1.3	15		861
	70	18	1.0	20		948
	56	21	1.0	25		1021
	46.7	24	0.8	30		1085
	70	19.2	2.0	20	NMRV040	1824
	56	23	1.7	25		1964
	46.7	26	1.7	30		2087
	35	32	1.3	40		2298
	28	38	1.0	50		2475
	23.3	43	0.8	60		2630
	35	32.9	2.3	40	NMRV050	3153
	28	39	1.9	50		3397
	23.3	43	1.6	60		3610
	17.5	52	1.2	80		3973
	14	60	0.9	100		4280
0.22	280	6.5	2.8	5	NMRV030	597
	186.7	10	1.9	7.5		683
	140	12	1.5	10		752
	93.3	17	1.0	15		861
	70	22	0.8	20		948
	93.3	18.5	2.2	15	NMRV040	1657
	70	23	1.7	20		1824
	56	28	1.4	25		1964
	46.7	32	1.4	30		2087
	35	39	1.1	40		2298
	28	47	0.8	50		2475
	28	47.3	1.5	50	NMRV050	3397
	23.3	53	1.3	60		3610
	17.5	64	1.0	80		3973
0.25	280	7.6	4.5	5	NMRV040	1149
	186.7	11	3.6	7.5		1315
	140	14	2.8	10		1447
	93.3	21	1.9	15		1657
	70	27	1.5	20		1824
	56	32	1.2	25		1964
	46.7	36	1.3	30		2087
	35	44	0.9	40		2298
	70	26.9	2.7	20	NMRV050	2503
	56	32	2.2	25		2696
	46.7	37	2.3	30		2865
	35	46	1.7	40		3153
	28	54	1.4	50		3397
	23.3	60	1.1	60		3610
	17.5	72	0.9	80		3973

Performance

P1(Kw)	n2(1/min)	M2(Nm)	F.S.	i	Type	Fr2(N)
0.25	28	56.3	2.4	50	NMRV063	4440
	23.3	63	2.0	60		4719
	17.5	78	1.6	80		5193
	14	87	1.4	100		5595
	17.5	81.9	2.3	80	NMRV075	6130
	14	94	1.9	100		6603
0.37	280	11.2	3.0	5	NMRV040	1149
	186.7	16	2.4	7.5		1315
	140	21	1.9	10		1447
	93.3	31	1.3	15		1657
	70	39	1.0	20		1824
	56	47	0.8	25		1964
	46.7	53	0.8	30		2087
	140	21.7	3.3	10	NMRV050	1987
	93.3	31	2.4	15		2274
	70	40	1.8	20		2503
	56	48	1.5	25		2696
	46.7	55	1.5	30		2865
	35	68	1.1	40		3153
	28	80	0.9	50		3397
	23.3	89	0.8	60		3610
	35	70.7	2.1	40	NMRV063	4122
	28	83	1.6	50		4440
	23.3	94	1.4	60		4719
	17.5	115	1.1	80		5193
	14	129	0.9	100		5595
	23.3	98.4	2.0	60	NMRV075	5569
	17.5	121	1.6	80		6130
	14	139	1.3	100		6603
0.55	280	16.7	2.0	5	NMRV040	1149
	186.7	24	1.6	7.5		1315
	140	32	1.3	10		1447
	93.3	46	0.9	15		1657
	280	16.7	3.7	5	NMRV050	1577
	186.7	25	2.9	7.5		1805
	140	32	2.2	10		1987
	93.3	46	1.6	15		2274
	70	59	1.2	20		2503
	56	71	1.0	25		2696
	46.7	81	1.0	30		2865
	70	60.8	2.2	20	NMRV063	3272
	56	73	1.8	25		3524
	46.7	83	1.9	30		3745
	35	105	1.4	40		4122
	28	124	1.1	50		4440
	23.3	140	0.9	60		4719
	35	108.1	2.0	40	NMRV075	4865
	28	129	1.6	50		5241
	23.3	146	1.4	60		5569
	17.5	180	1.1	80		6130
	14	206	0.9	100		6603
	17.5	189.1	1.5	80	NMRV090	6783
	14	221	1.2	100		7306

Performance

P1(Kw)	n2(1/min)	M2(Nm)	F.S.	i	Type	Fr2(N)
0.55	17.5	201.1	2.6	80	NMRV110	8571
	14	236	2.0	100		9232
0.75	280	22.8	2.7	5	NMRV050	1577
	186.7	34	2.1	7.5		1805
	140	44	1.6	10		1987
	93.3	63	1.2	15		2274
	70	81	0.9	20		2503
	93.3	63.7	2.2	15	NMRV063	2973
	70	83	1.6	20		3272
	56	100	1.3	25		3524
	46.7	114	1.4	30		3745
	35	143	1.0	40		4122
	56	102.3	2.0	25	NMRV075	4160
	46.7	117	2.0	30		4421
	35	147	1.5	40		4865
	28	177	1.2	50		5241
	23.3	200	1.0	60		5569
	28	184.2	1.8	50	NMRV090	5799
	23.3	212	1.5	60		6163
	17.5	258	1.1	80		6783
	14	302	0.9	100		7306
	17.5	274.2	1.9	80	NMRV110	8571
	14	322	1.5	100		9232
1.1	186.7	49.5	2.6	7.5	NMRV063	2359
	140	65	2.0	10		2597
	93.3	93	1.5	15		2973
	70	122	1.1	20		3272
	56	146	0.9	25		3524
	46.7	167	1.0	30		3745
	93.3	95.7	2.1	15	NMRV075	3509
	70	123	1.7	20		3862
	56	150	1.3	25		4160
	46.7	171	1.3	30		4421
	35	216	1.0	40		4865
	35	225.1	1.6	40	NMRV090	5383
	28	270	1.3	50		5799
	23.3	311	1.0	60		6163
	28	281.4	2.3	50	NMRV110	7328
	23.3	324	1.9	60		7787
	17.5	402	1.3	80		8571
	14	473	1.0	100		9232
	17.5	408.2	2.1	80	NMRV130	11210
	14	480	1.5	100		12076
1.5	186.7	67.5	1.9	7.5	NMRV063	2359
	140	89	1.5	10		2597
	93.3	127	1.1	15		2973
	70	166	0.8	20		3272
	140	90	2.2	10	NMRV075	3065
	93.3	130	1.5	15		3509
	70	168	1.3	20		3862
	56	205	1.0	25		4160
	46.7	233	1.0	30		4421

Performance

P1(Kw)	n2(1/min)	M2(Nm)	F.S.	i	Type	Fr2(N)
1.5	70	171.9	2.1	20	NMRV090	4273
	56	210	1.6	25		4603
	46.7	239	1.6	30		4890
	35	307	1.2	40		5383
	28	368	0.9	50		5799
	23.3	424	0.8	60		6163
	35	319.2	2.2	40	NMRV110	6803
	28	384	1.7	50		7328
	23.3	442	1.4	60		7787
	17.5	548	0.9	80		8571
	17.5	556.6	1.5	80	NMRV130	11210
	14	655	1.1	100		12076
2.2	186.7	100.2	1.8	7.5	NMRV075	2785
	140	132	1.5	10		3065
	93.3	191	1.0	15		3509
	186.7	101.3	2.9	7.5	NMRV090	3081
	140	134	2.3	10		3391
	93.3	194	1.9	15		3882
	70	252	1.4	20		4273
	56	308	1.1	25		4603
	46.7	315	1.2	30		4891
	70	255.1	2.5	20	NMRV110	5399
	56	315	2.2	25		5816
	46.7	356	2.0	30		6181
	35	468	1.5	40		6803
	28	563	1.2	50		7328
	23.3	648	1.0	60		7787
	35	468.2	2.2	40	NMRV130	8897
	28	563	1.7	50		9584
	23.3	684	1.4	60		10185
	17.5	816	1.0	80		11210
3	186.7	136.6	1.4	7.5	NMRV075	2785
	140	180	1.1	10		3065
	93.3	261	0.8	15		3509
	186.7	138.1	2.1	7.5	NMRV090	3081
	140	182	1.7	10		3391
	93.3	264	1.4	15		3882
	70	344	1.0	20		4273
	56	420	0.8	25		4603
	46.7	479	0.9	30		4891
	93.3	264	2.5	15	NMRV110	4905
	70	348	1.9	20		5399
	56	430	1.6	25		5816
	46.7	485	1.5	30		6181
	35	638	1.1	40		6803
	28	767	0.9	50		7328
	56	429.8	2.2	25	NMRV130	7607
	46.7	491	2.1	30		8084
	35	638	1.6	40		8897
	28	767	1.3	50		9584
	23.3	884	1.0	60		10185
	17.5	1113	0.8	80		11210

Performance

P1(Kw)	n2(1/min)	M2(Nm)	F.S.	i	Type	Fr2(N)
4	186.7	184.2	1.6	7.5	NMRV090	3081
	140	243	1.3	10		3391
	93.3	352	1.0	15		3882
	70	458	0.8	20		4273
	140	242.8	2.5	10	NMRV110	4285
	93.3	352	1.9	15		4905
	70	464	1.4	20		5399
	56	573	1.2	25		5816
	46.7	647	1.1	30		6181
	56	573	1.6	25	NMRV130	7607
	46.7	655	1.6	30		8084
	35	851	1.2	40		8897
	28	1023	1.0	50		9584
	23.3	1179	0.8	60		10185
4.8	186.7	211	1.3	7.5	NMRV090	3081
	140	291	1.1	10		3391
	93.3	422	0.9	15		3882
	186.7	221	2.5	7.5	NMRV110	3893
	140	291	2.1	10		4285
	93.3	422	1.6	15		4905
	70	557	1.2	20		5399
	56	688	1.0	25		5816
	56	687.6	1.4	25	NMRV130	7607
	46.7	786	1.3	30		8084
	35	1022	1.0	40		8897
	28	1228	0.8	50		9584
5.5	186.7	253.2	2.2	7.5	NMRV110	3893
	140	334	1.8	10		4285
	93.3	484	1.4	15		4905
	70	638	1.0	20		5399
	140	333.9	2.5	10	NMRV130	5605
	93.3	490	1.9	15		6416
	70	645	1.4	20		7062
	56	788	1.2	25		7607
	46.7	900	1.2	30		8084
	35	1171	0.9	40		8897
7.5	186.7	345.3	1.6	7.5	NMRV110	3893
	140	455	1.3	10		4285
	93.3	660	1.0	15		4905
	186.7	349.2	2.1	7.5	NMRV130	5092
	140	455	1.8	10		5605
	93.3	668	1.4	15		6416
	70	880	1.0	20		7062
	56	1074	0.9	25		7607
	46.7	1228	0.8	30		8084
	35	1596	0.7	40		8897
9.2	186.7	423.6	1.3	7.5	NMRV110	3893
	186.7	428.3	1.8	7.5	NMRV130	5092
	140	559	1.5	10		5605
	93.3	819	1.1	15		6416
	70	1079	0.8	20		7062
	56	1318	0.7	25		7607

Performance

(n1=1400)

M2(Nm)	i	P1(Kw)	n2(1/min)	Type	Fr2(N)	Fr1(N)
18	5	0.6	280	NRV030	597	150
18	7.5	0.4	186.7		683	150
18	10	0.3	140		752	169
18	15	0.2	93.3		861	169
18	20	0.2	70		984	190
21	25	0.2	56		1021	210
20	30	0.2	46.7		1085	210
18	40	0.1	35		1194	210
17	50	0.1	28		1286	210
16	60	0.1	23.3		1367	210
13	80	0.1	17.5		1504	210
34	5	1.1	280	NRV040	1149	250
40	7.5	0.9	186.7		1315	294
40	10	0.7	140		1447	331
40	15	0.5	93.3		1657	331
39	20	0.4	70		1824	350
38	25	0.3	56		1964	350
45	30	0.3	46.7		2087	350
41	40	0.2	35		2298	350
39	50	0.2	28		2475	350
36	60	0.2	23.3		2630	350
33	80	0.1	17.5		2895	350
29	100	0.1	14		3118	350
62	5	2.0	280	NRV050	1577	350
71	7.5	1.6	186.7		1805	401
72	10	1.2	140		1987	490
74	15	0.9	93.3		2274	490
73	20	0.7	70		2503	490
70	25	0.5	56		2696	490
84	30	0.6	46.7		2865	490
76	40	0.4	35		3153	490
73	50	0.3	28		3397	490
68	60	0.3	23.3		3610	490
65	80	0.2	17.5		3973	490
55	100	0.2	14		4280	490
128	7.5	2.8	186.7	NRV063	2359	500
130	10	2.2	140		2597	571
140	15	1.6	93.3		2973	615
135	20	1.2	70		3272	667
130	25	1.0	56		3524	700
160	30	1.1	46.7		3745	700
145	40	0.8	35		4122	700
135	50	0.6	28		4440	700
130	60	0.5	23.3		4719	700
122	80	0.4	17.5		5193	700
118	100	0.3	14		5595	700

NRV Performance

(n1=1400)

M2(Nm)	i	P1(Kw)	n2(1/min)	Type	Fr2(N)	Fr1(N)
185	7.5	4.1	186.7	NRV075	2785	700
195	10	3.2	140		3065	830
200	15	2.3	93.3		3509	851
210	20	1.9	70		3862	980
200	25	1.5	56		4160	980
230	30	1.5	46.7		4421	980
220	40	1.1	35		4865	980
210	50	0.9	28		5241	980
200	60	0.8	23.3		5569	980
190	80	0.6	17.5		6130	980
180	100	0.5	14		6603	980
290	7.5	6.3	186.7	NRV090	3081	900
310	10	5.1	140		3391	1082
360	15	4.1	93.3		3882	1257
355	20	3.1	70		4273	1270
340	25	2.4	56		4603	1270
410	30	2.6	46.7		4891	1270
360	40	1.8	35		5383	1270
340	50	1.4	28		5799	1270
320	60	1.1	23.3		6163	1270
285	80	0.8	17.5		6783	1270
370	100	0.7	14		7306	1270
552	7.5	12	186.7	NRV110	3893	1200
598	10	9.8	140		4285	1463
656	15	7.5	93.3		4905	1604
644	20	5.6	70		5399	1700
679	25	4.7	56		5816	1700
725	30	4.5	46.7		6181	1700
702	40	3.3	35		6803	1700
660	50	2.6	28		7328	1700
616	60	2.1	23.3		7787	1700
515	80	1.4	17.5		8571	1700
483	100	1.1	14		9232	1700
750	7.5	16.1	186.7	NRV130	5092	1500
820	10	13.5	140		5605	1845
920	15	10.3	93.3		6416	2070
910	20	7.8	70		7062	2100
930	25	6.5	56		7607	2100
1040	30	6.4	46.7		8084	2100
1050	40	4.9	35		8897	2100
980	50	3.8	28		9584	2100
900	60	3.1	23.3		10185	2100
840	80	2.3	17.5		11210	2100
740	100	1.7	14		12076	2100

Dimensions NMRV025

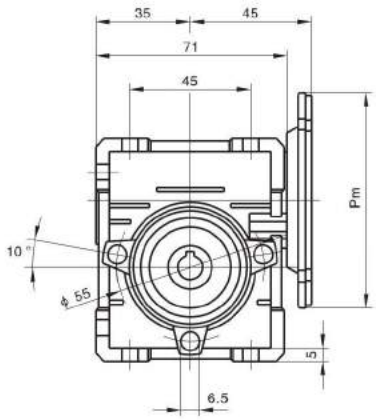

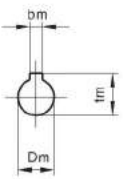

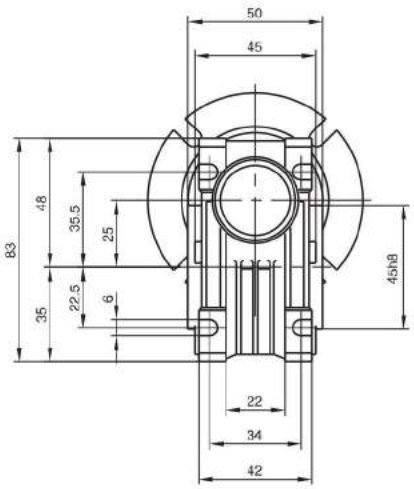

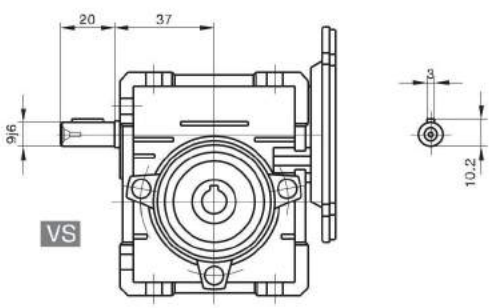

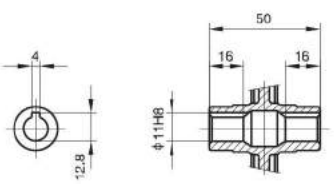

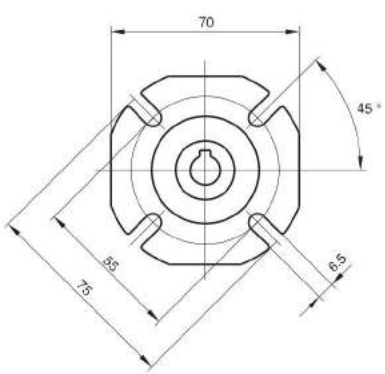

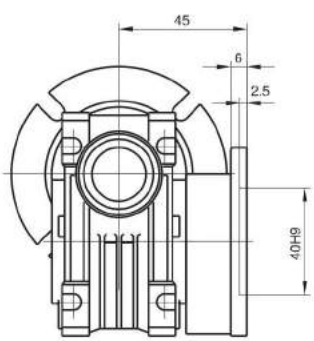

F

Motor model	Power (W)			
3I(R)K	10	15	20	30
4I(R)K	25	30	40	
5I(R)K	40	60	90	120

Dimensions NMRV030

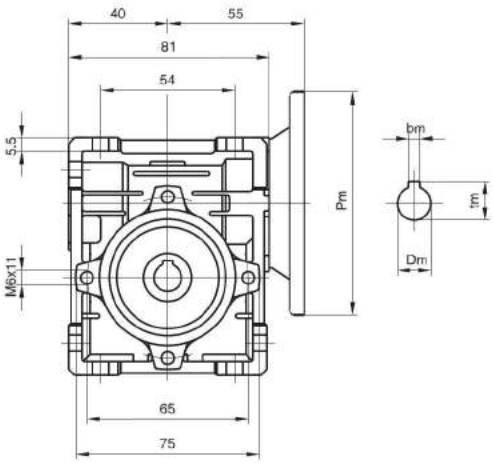

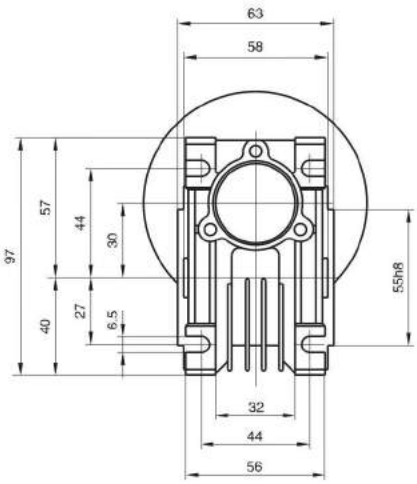

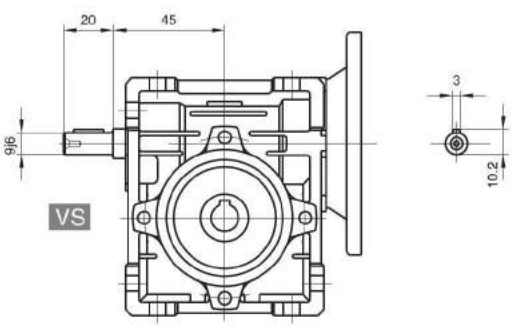

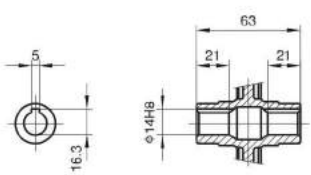

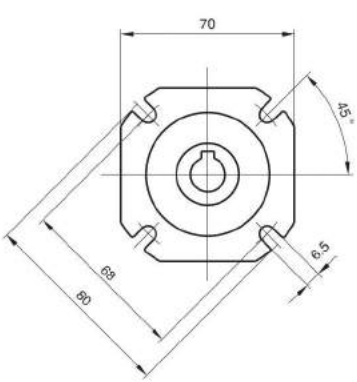

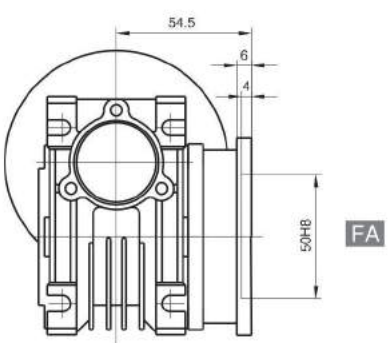

Motor mode	Power (W)				
4I(R)K	25	30	40		
5I(R)K	40	60	90	120	
6I(R)K	70	120	140	180	200

Dimensions NMRV040

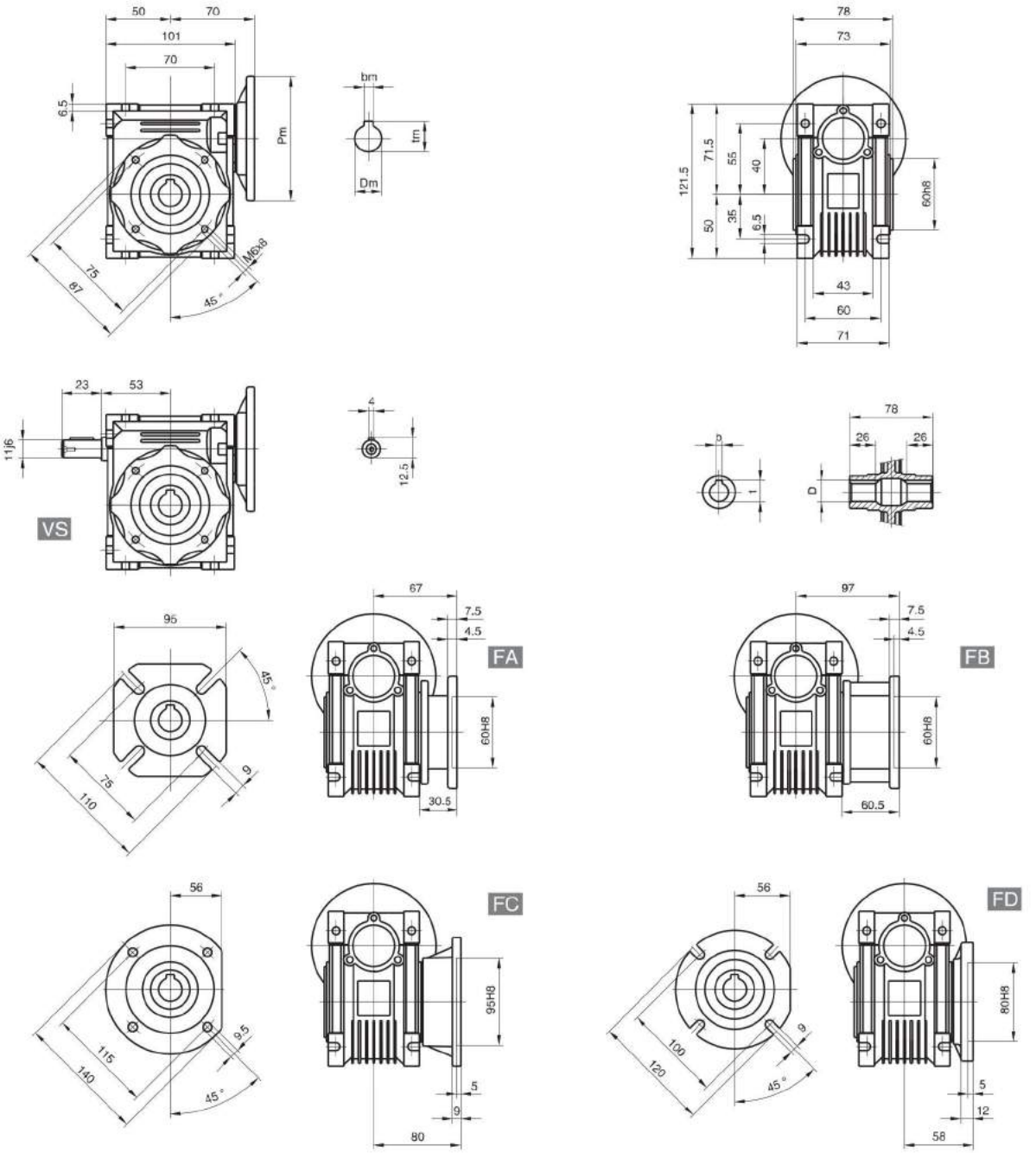

Dimensions NMRV050

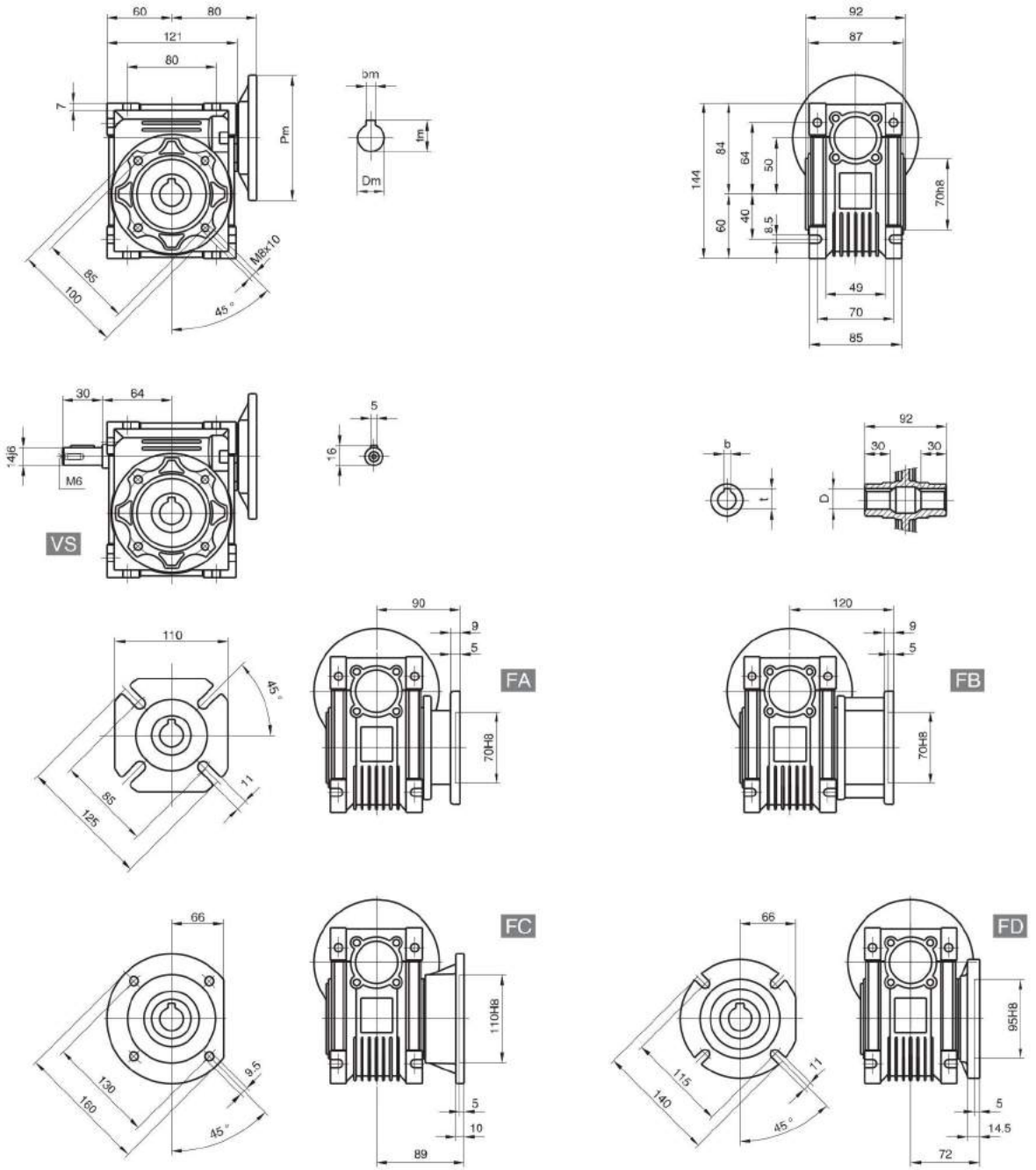

Dimensions NMRV063

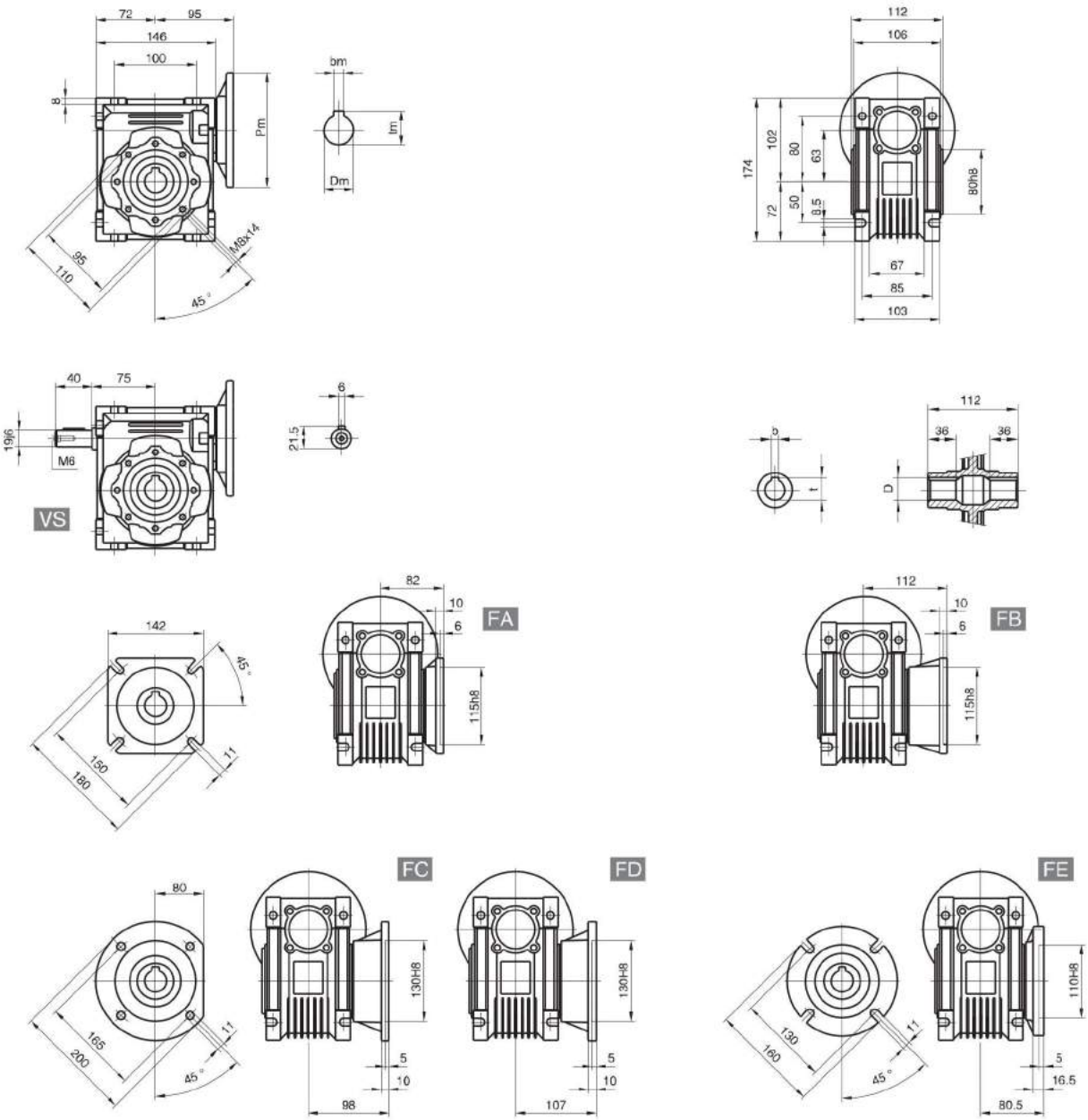

Output		
D H8	b	t
25 (28)	8 (8)	28.3 (31.3)

Dimensions NMRV075

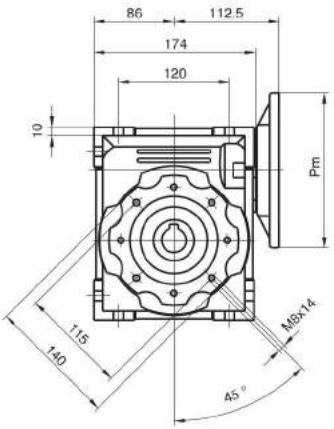

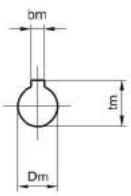

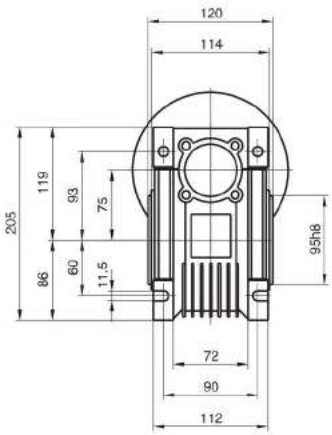

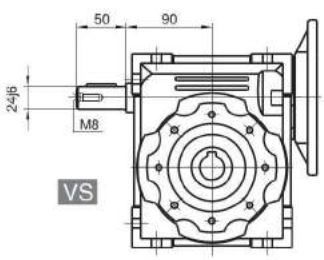

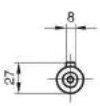

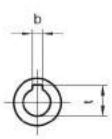

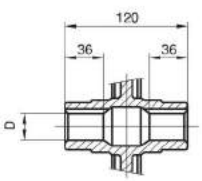

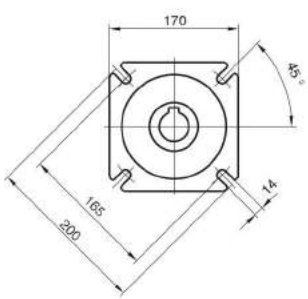

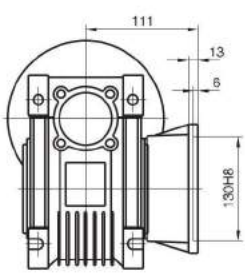

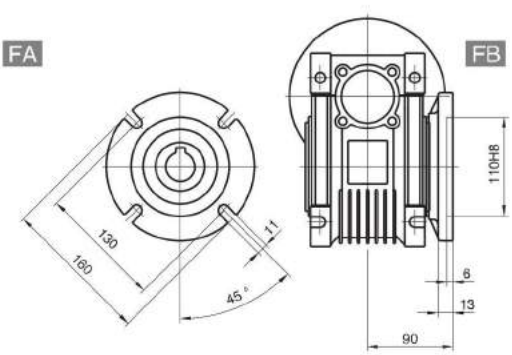

Output		
D H8	b	t
28 (35)	8 (10)	31.3 (38.3)

Dimensions NMRV090

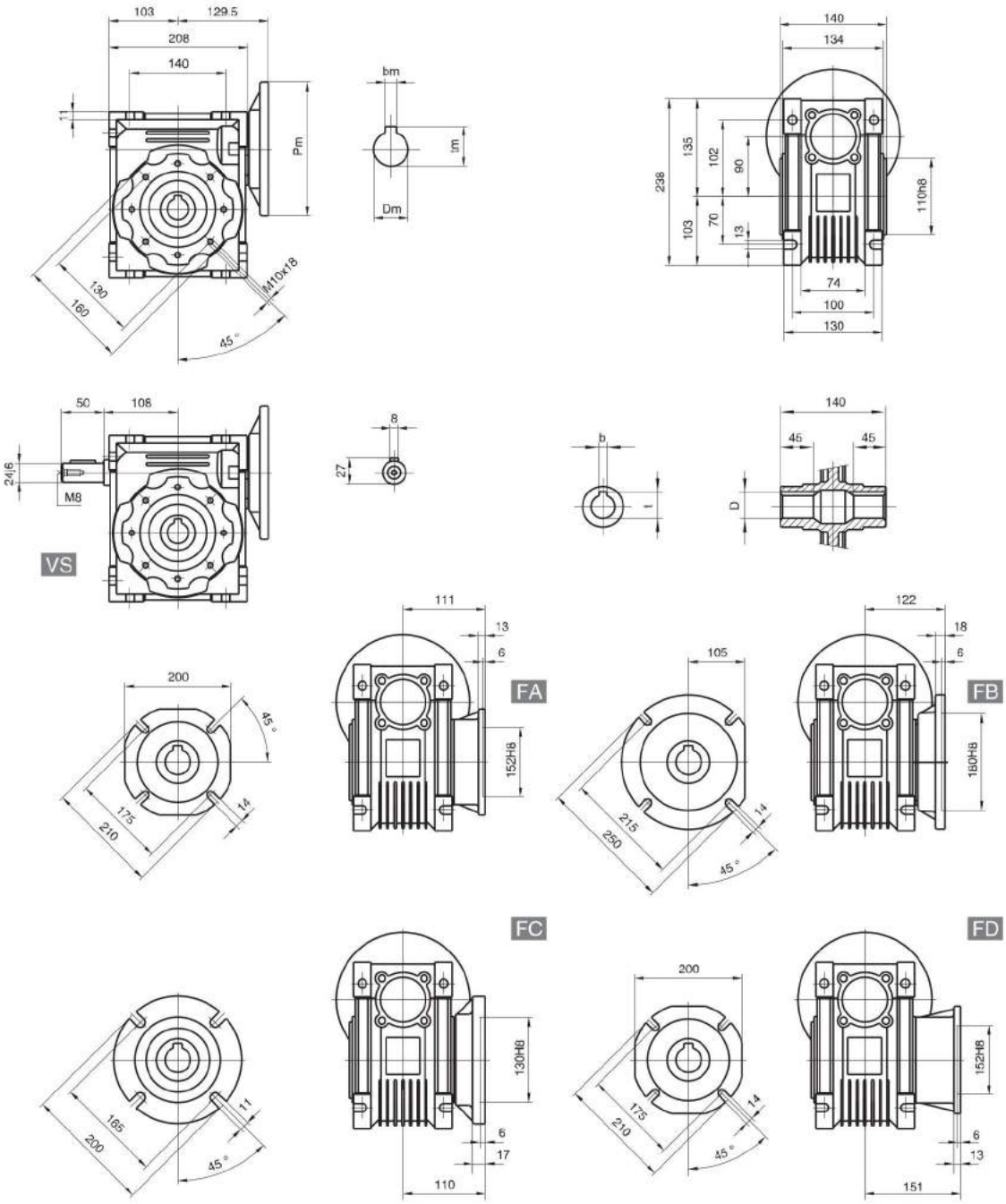

Output		
D H8	b	t
35 (38)	10 (10)	38.3 (41.3)

Dimensions NMRV110

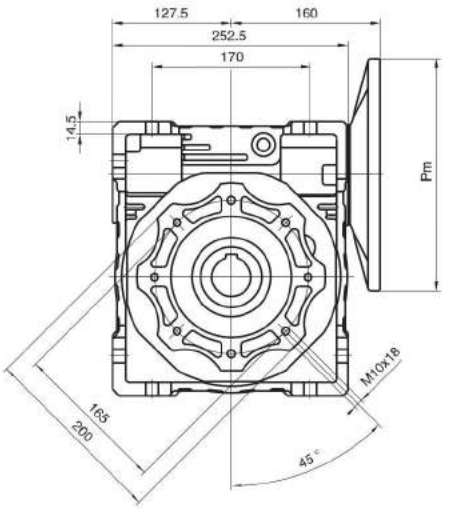

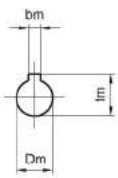

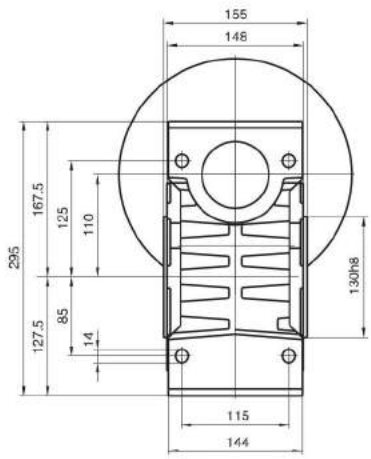

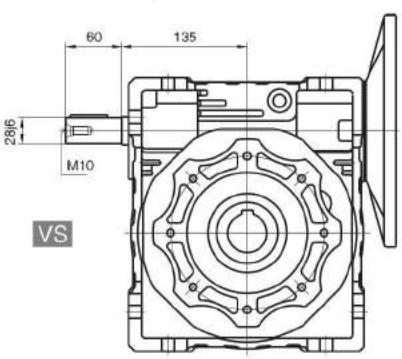

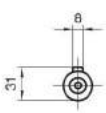

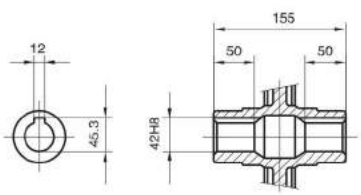

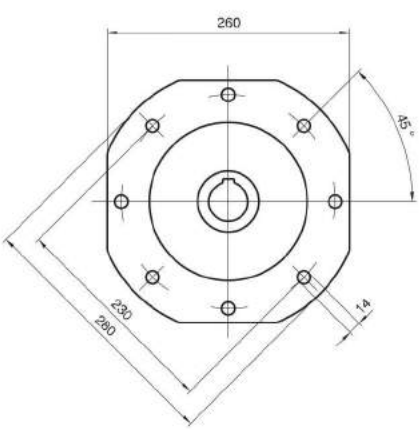

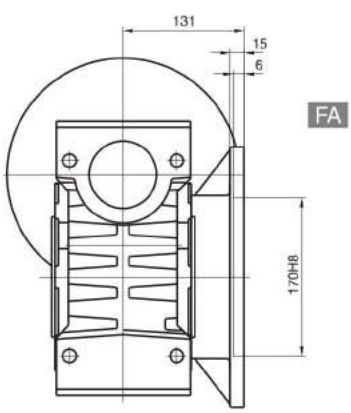

Dimensions NMRV130

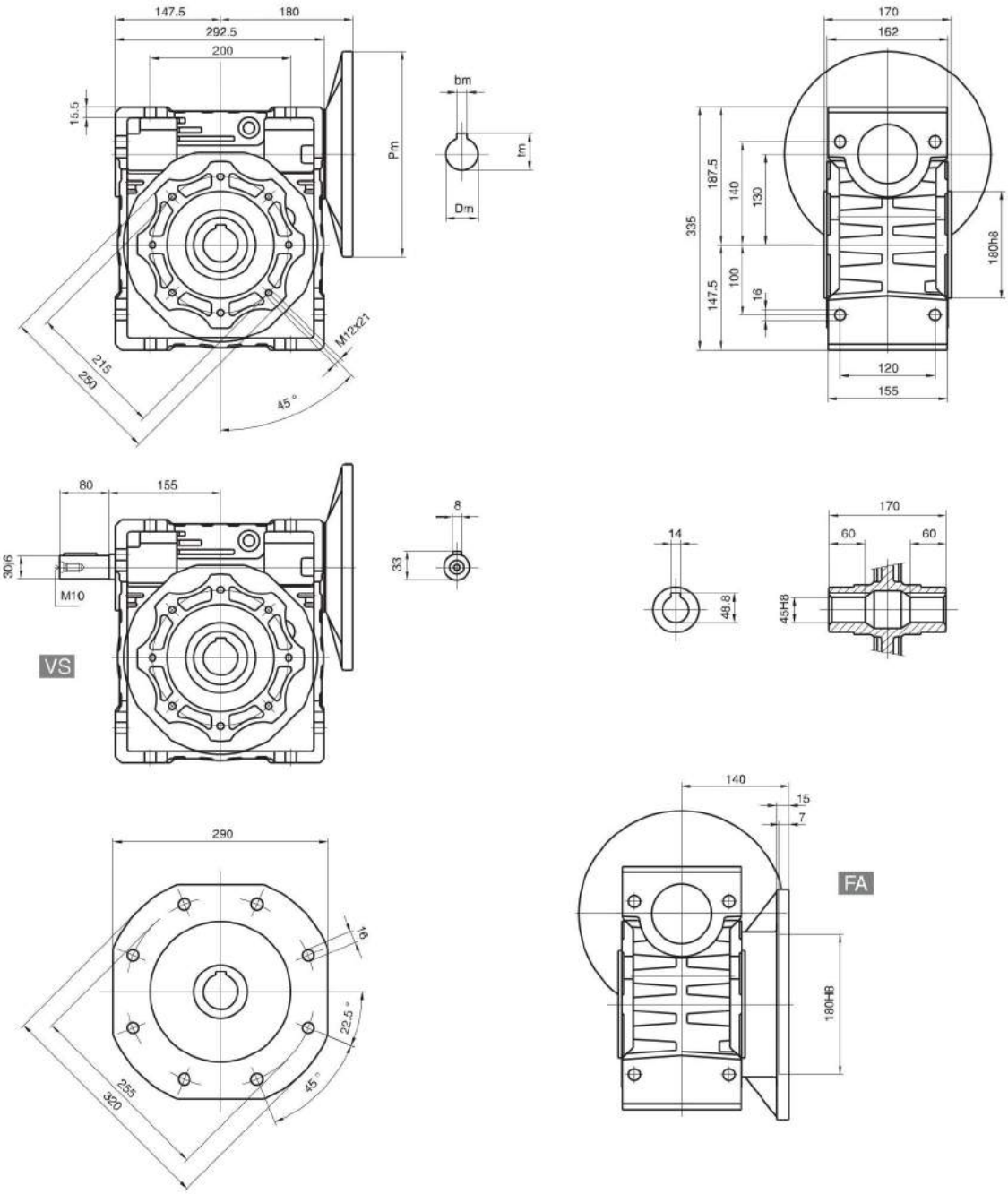

Only on request

Weight without motor: 48kg

Sizes of doubie extension worm shaft

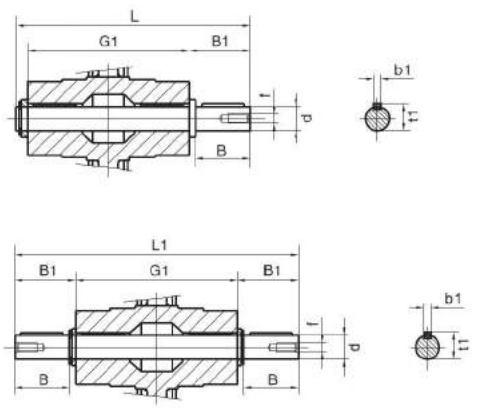

	d	B	B1	G1	L	L1	f	b1	t1
025	11g6 (9)	23 (25)	25.5 (30)	50	81 (85.5)	101	–	4 (3)	12.5 (10.2)
030	14 g6	30	32.5	63	102	128	M6	5	16
040	18 h6	40	43	78	128	164	M6	6	20.5
050	25 h6	50	53.5	92	153	199	M10	8	28
063	25 h6	50	53.5	112	173	219	M10	8	28
075	28 h6	60	63.5	120	192	247	M10	8	31
090	35 h6	80	84.5	140	234	309	M12	10	38
110	42 h6	80	84.5	155	249	324	M16	12	45
130	45 h6	80	85	170	265	340	M16	14	48.5

Only on request

Sizes of doubie extension worm shaft

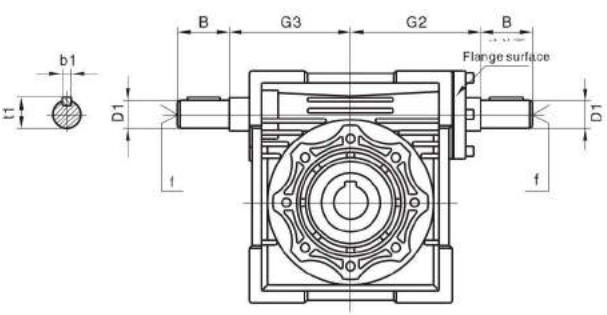

	G2, G3	D1(j6)	B	f	b1	t1
030	45	9	20	–	3	10.2
040	53	11	23	–	4	12.5
050	64	14	30	M6	5	16
063	75	19	40	M6	6	21.5
075	90	24	50	M8	8	27
090	108	24	50	M8	8	27
110	135	28	60	M10	8	31
130	155	30	80	M10	8	33

Sizes of torque arm

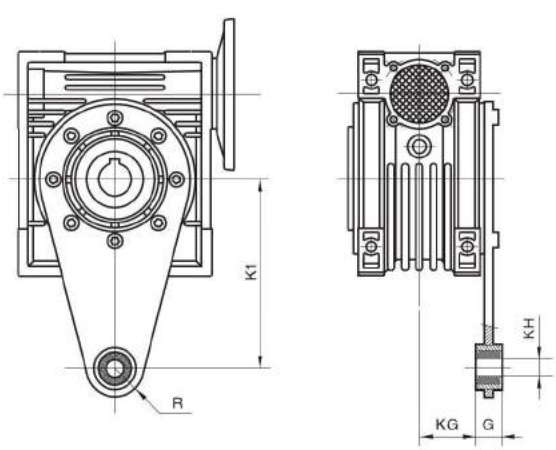

	K1	G	KG	KH	R
025	70	14	17.5	8	15
030	85	14	24	8	15
040	100	14	31.5	10	18
050	100	14	38.5	10	18
063	150	14	49	10	18
075	200	25	47.5	20	30
090	200	25	57.5	20	30
110	250	30	62	25	35
130	250	30	69	25	35